Technical Drawing

Product code: **77210 /77219**
Product range: **Cascata**

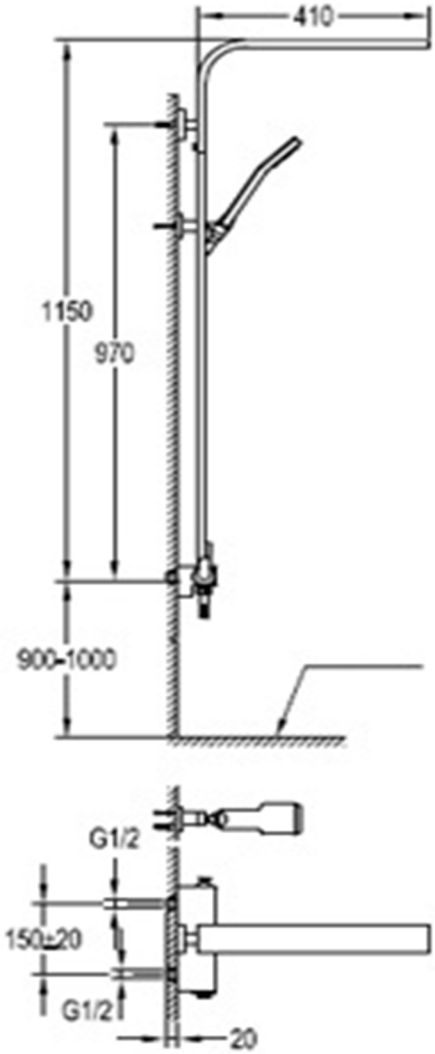

www.jtpuk.co.uk
technical@jtpuk.co.uk
01895 442211