Technical Drawing

Product code: **15657**
Product range: **Florence**

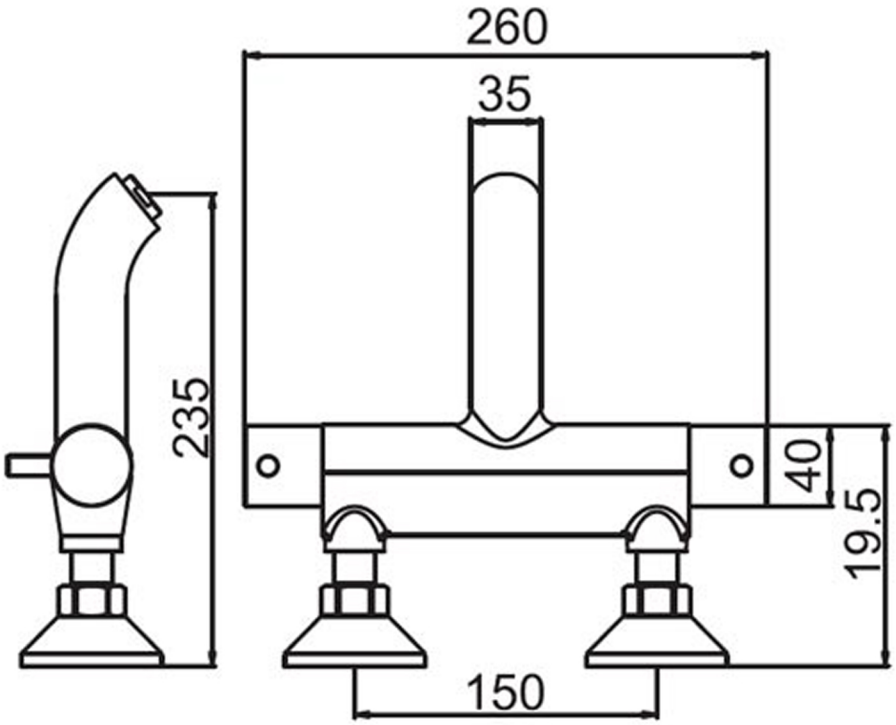

www.jtpuk.co.uk
technical@jtpuk.co.uk
01895 442211